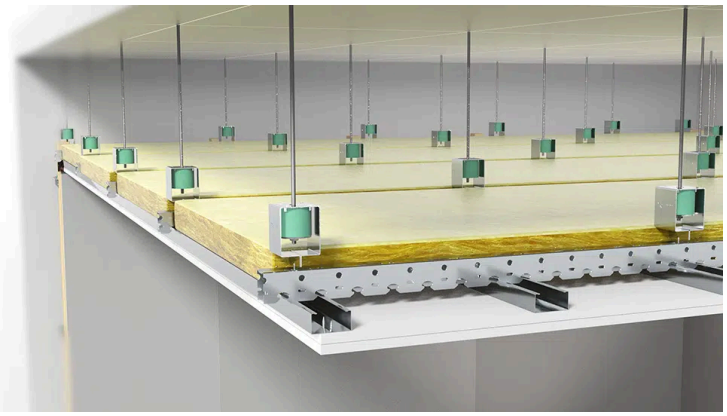

Ceiling System VT-CBC

The Vibratec VT-CBC Ceiling System is an acoustic ceiling designed and optimized for rehearsal rooms, music studios, theaters, cinemas, residential buildings, restaurants, offices etc.

Product Characteristics

The VT-CBC Crossbar Ceiling is a double frame ceiling system with click-on hangers and profiles designed to optimize the sound isolation of suspended ceilings. The system comprises of VT-CBC hangers, click-on crossbars and C-profile rails. Depending on required resonance frequency the VT-CBC hangers can be delivered with REGUFOAM vibration pads in thickness 25 mm, 37 mm or 50 mm.

The VT-CBC Ceiling System is a very flexible system because of the two layers of framing. If heating, ventilation or other installations require the hangers to be spaced differently in certain areas, this will not affect the spacing between the secondary framing. This results in quicker and easier installation of gypsum boards. This is illustrated in the image with the green arrows and the animation below.Please feel free to contact us at Vibratec and we will assist with the load calculations for this ceiling system.

EPD INTERNATIONAL EPD SYSTEM

ECO PLATFORM EPD VERIFIED

Ceiling system VT-CBC is an EPD-certified product.

Product Applications

An acoustic ceiling designed and optimized for:

- rehearsal rooms
- music studios
- theaters
- cinemas
- residential buildings
- restaurants
- offices and more.

For lighter ceilings see our Ceiling System VT-SFC. For lower resonance frequency see our Ceiling system VT-MSH.

Installation Guidelines

The hangers are mechanically fixed via threaded rod to the ceiling with c/c-distances G and P and clicked into the crossbars. Secondary profiles with c/c-distance S are clicked onto the crossbars. Plasterboard can then be fixed on to the rails.

Our self adhesive elastic strip VT-Strip should be used to isolate the suspended ceiling from surrounding walls to avoid undermining the acoustic integrity of the ceiling.

Mineral wool should be used in the air void to absorb possible standing waves in the void.

Technical Specifications

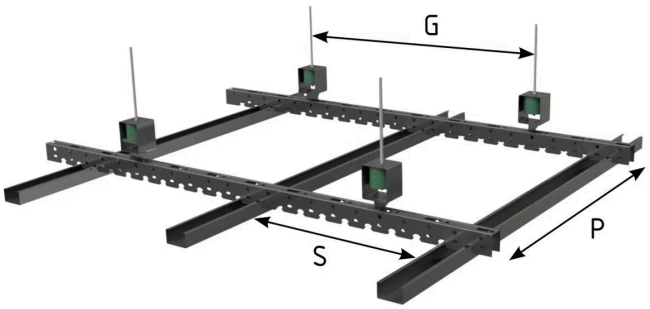

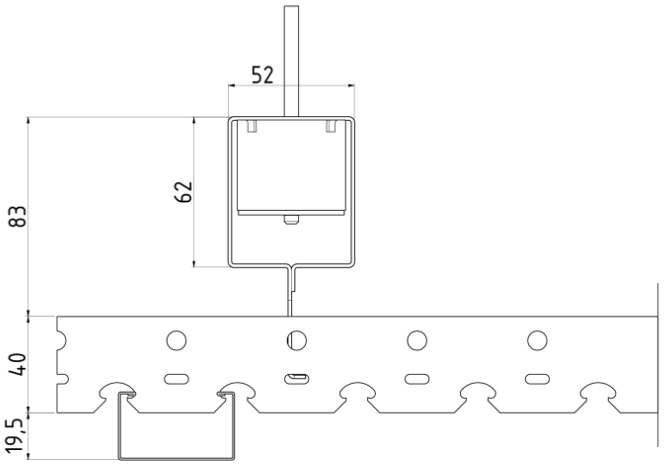

Ceiling system VT-CBC technical specifications

ceiling-system-vt-cbc-technical-specifications.xlsx

Load range and support distance

Distance between VT-CBC hangers			
Ceiling weight kg/m^2	**P (mm)**	**G (mm)**	**kg/support**
10 -15	1200	900	11 - 14
15 -30	1000	800	11 - 22
30 - 50	750	600	13 - 22
50 - 75	600	600	18 - 27
Spacing S should not exceed 400 mm at longitudinal installation and 500 mm at transversal installation.			

Natural frequency & deflection

Type	Elastic part	f_n (Hz)	Deflection (mm)
VT-CBC-RF25	25 mm pad	9 - 11	1 - 2
VT-CBC-RF37	37 mm pad	7 - 9	2 - 3
VT-CBC-RF50	50 mm pad	6 - 7	4 - 5

Downloads

Installation manual: Ceiling system VT-CBC | english

Ceiling System VT-CBC, FDV documentation | Swedish

VT-CBC and VT-SFC Airborne Sound Reduction | Test report

VT-CBC and VT-SFC Impact Sound Reduction | Test report

EPD document | EPD-IES-0030216:001 english

Installation manual rampamuff | Swedish

Installation manual threaded insert | English

Contact information

Sweden	Norway	Denmark	Estonia	Finland	India
+46 176207880 info@vibratec.se	+47 33070750 info@vibratec.no	+45 49132244 info@vibratec.dk	+372 56627990 info@vibratec.ee	+35 8402589117 palvelu@3di.fi	+91 7755996308 rc@vibratec.in

vibratec.org/linkedin vibratec.org/youtube vibratec.org/vimeo