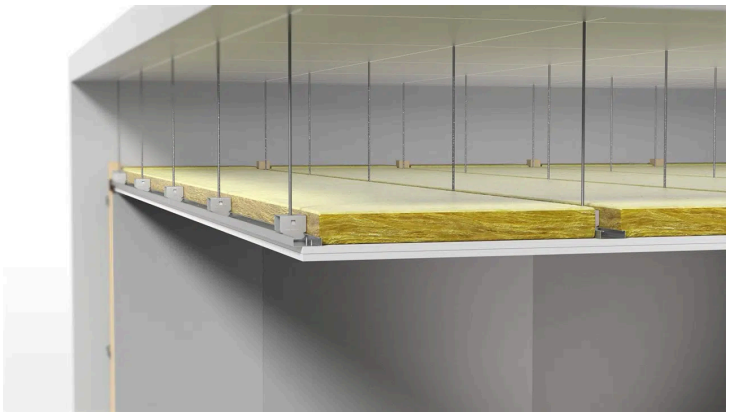

Ceiling System VT-SFC

The VT-SFC Single Frame Ceiling System is designed to optimize the sound isolation of suspended ceilings. The system comprises of VT-SFC hangers and profile rails.

Product Characteristics

Deflection: 1-3 mm
Resonance frequency down to 9 Hz.

EPD INTERNATIONAL EPD SYSTEM

ECO PLATFORM EPD VERIFIED

Ceiling system VT-SFC is an EPD-certified product.

Product Applications

Installation Guidelines

The hangers are mechanically fixed to the ceiling and the profile rail is clicked on to the hangers. Plasterboard can then be fixed on to the rails. VT-SFC hangers must only be used with Vibratecs profile rails to ensure structural stability of the ceiling. A self adhesive elastic strip VT-strip should be used to isolate the suspended ceiling from surrounding walls to avoid undermining the acoustic integrity of the ceiling.

Mineral wool should be used in the air void to absorb possible standing waves in the void.

Technical Specifications

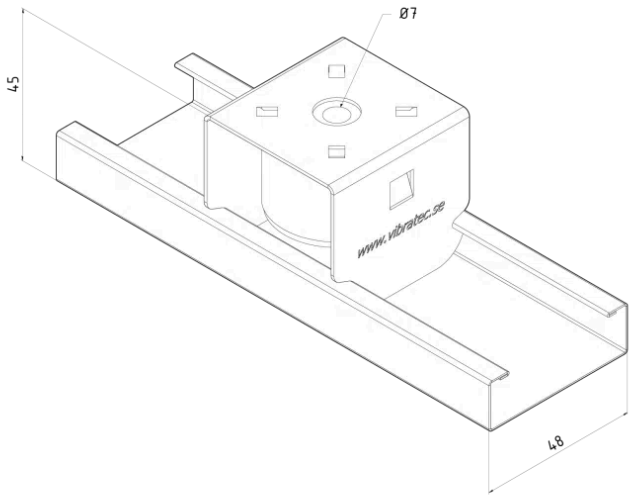

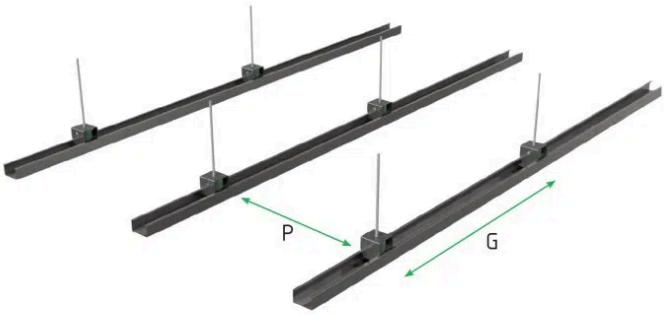

VT-SFC-technical-specifications

vt-sfc-technical-specifications.xlsx

Load range - Natural frequency

Distance between VT-SFC hangers				
ceiling weight kg/m^2	P (mm)	G (mm)	kg/hanger	f_n (Hz)
10 -15	600	1000	6 - 9	14 - 16 Hz
15 -30	450	900	9 - 12	11 - 14 Hz
30 - 50	450	750	12 - 17	9 - 11 Hz
50 - 75	450	500	12 - 17	9 - 11 Hz

Downloads

Installation manual: Ceiling system VT-SFC | English

EPD document | EPD-IES-0030216:001 english

Installation manual rampamuff | Swedish

Installation manual threaded insert | English

VIBRATEC

Contact information

Sweden	Norway	Denmark	Estonia	Finland	India
+46 176207880 info@vibratec.se	+47 33070750 info@vibratec.no	+45 49132244 info@vibratec.dk	+372 56627990 info@vibratec.ee	+35 8402589117 palvelu@3di.fi	+91 7755996308 rc@vibratec.in

vibratec.org/linkedin vibratec.org/youtube vibratec.org/vimeo